DSN
Switch-Rated

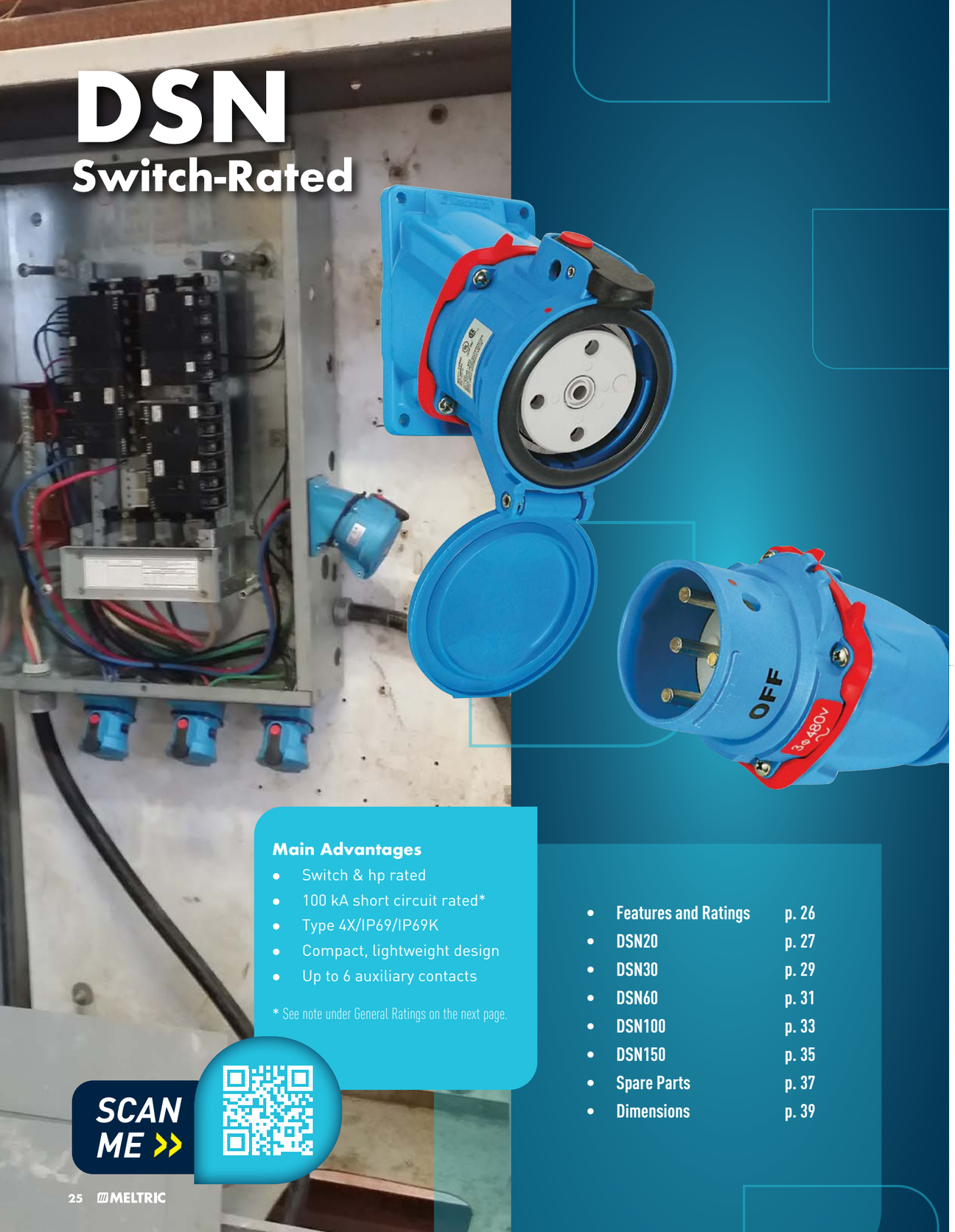

Main Advantages

- Switch & hp rated
- 100 kA short circuit rated*
- Type 4X/IP69/IP69K
- Compact, lightweight design
- Up to 6 auxiliary contacts

* See note under General Ratings on the next page.

- Features and Ratings p. 26
- DSN20 p. 27
- DSN30 p. 29
- DSN60 p. 31
- DSN100 p. 33
- DSN150 p. 35
- Spare Parts p. 37
- Dimensions p. 39

SCAN ME >>

PRODUCT FEATURES

DECONTACTOR™ Technology

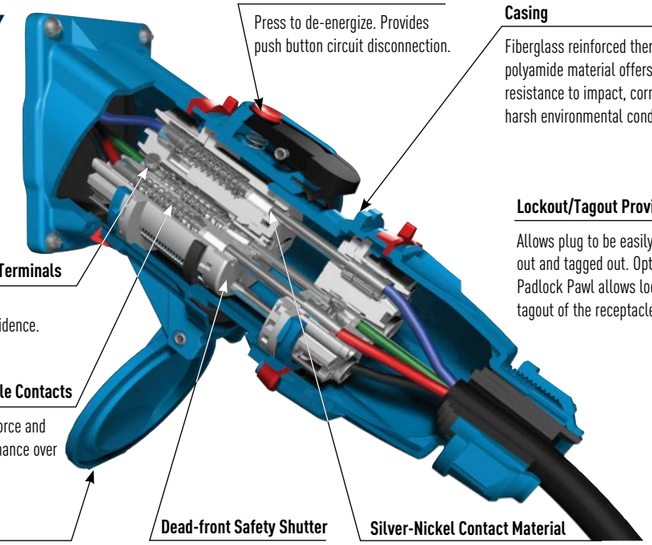

OFF Button
Press to de-energize. Provides push button circuit disconnection.

Casing
Fiberglass reinforced thermoplastic polyamide material offers great resistance to impact, corrosion and harsh environmental conditions.

Lockout/Tagout Provisions
Allows plug to be easily locked out and tagged out. Optional Padlock Pawl allows lockout/tagout of the receptacle.

Spring Assisted Screw Terminals
Patented design ensures "Tighten and Forget" confidence.

Spring-Loaded Butt-Style Contacts
Ensures optimal contact force and superior electrical performance over thousands of operations.

Lid
Provides 4X/IP69/IP69K for additional protection in harsh environments.

Dead-front Safety Shutter
Ensures safety by preventing user access to live parts.

Silver-Nickel Contact Material
Solid silver-nickel contact surfaces provide superior conductivity, durability and corrosion resistance.

General Ratings

Amperage	20 to 150 A
Voltage	600 VAC Max
Frequency	50-400 Hz
Horsepower	.75 to 75 hp
Short-Circuit (Make & Withstand)	100 kA*
Environmental	Type 4X/IP69/IP69K
Temperature	Min -40°F/Max 140°F

* DSN20, 30, 60 and 100: Testing was performed with RK1 current limiting fuses sized at 400% or more of the highest full load motor ampacity associated with the devices horsepower ratings.

* DSN 150: 100 kA testing was performed with 225 A RK1 non-time delay Mersen fuses. 10 kA testing was performed with 400 A RK1 non-time delay Mersen fuses.

Highlighted Feature

Typical Device Labels

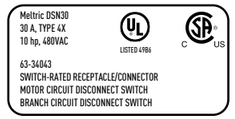

MELTRIC DSN Series Switch-Rated devices are UL & CSA rated for motor circuit and branch circuit disconnect switching – up to 75 hp and up to 150 A.

Listings

Category	UL	CSA	IEC	NOM
Plugs and Receptacles	UL 1682	C22.2 No. 182.1	60309-1	NOM-003-SCFI-2014
Branch Circuit Disconnect Switching (AC only)	UL Subject 2682 (Performance tests from UL 98)	UL Subject 2682	60947-3, AC22, AC23	
Motor Circuit Disconnect Switching (AC only)	UL Subject 2682 (Performance tests from UL 98)	UL Subject 2682	60947-3, AC22, AC23	

Operating Instructions

When the plug and receptacle are latched together the circuit is connected.

Pressing the pawl breaks the connection and opens the circuit. The plug is ejected to its rest position; the contacts are now de-energized.

Rotating the de-energized plug 30° counterclockwise closes the safety shutter and frees the plug to be withdrawn from the receptacle.

The plug and the receptacle are separated. The safety shutter prevents access to live parts.

5 To reconnect, align red dots, insert plug into receptacle, rotate 30° clockwise, and apply insertion force.

DSN20 Switch-Rated - 20 A

UL/CSA Ratings

- **Max Amperage & Voltage**
  20 A, 600 VAC
- **Switch-Rating (AC Only)**
  Branch Circuit & Motor Circuit Disconnect Switching
- **Horsepower Ratings**

120 V	1Ø	.75 hp
240 V	1Ø	2 hp
208 V	3Ø	3 hp
240 V	3Ø	3 hp
480 V	3Ø	7.5 hp
600 V	3Ø	7.5 hp

- **Short Circuit Rating**
  100 kA Close & Withstand
  Testing was performed with 35 A RK1 non-time delay Mersen fuses.
  10 kA Close & Withstand
  Testing was performed with 50 A RK1 non-time delay Mersen fuses.
- **Environmental Ratings**
  Type 4X/IP66/IP67/IP69/IP69K
- **Temperature Range**
  Min -40°F/Max 140°F
  See pg 254 for temperatures outside of this range.
- **Wiring Capacity**
  Based on THHN wire sizes
  Min 14 AWG Max 12 AWG
  Aux Contacts - Prewired 18 AWG
- **Certifications**
  UL 2682, UL 1682,
  CSA C22.2 NO. 182.1, NOM

Receptacle
(female)

Inlet
(male)

! Don't forget to add installation accessories to your order

North American UL/CSA Configurations

VOLTAGE	POLARITY	PART # POLY	PART # POLY
120 V	1P+N+G	63-14125-K16•	63-18125-K16•
120 208 V	3P+N+G	63-14127-K16•	63-18127-K16•
125 V	1P+N+G	63-14075	63-18075
125 250 V	2P+N+G	63-14076	63-18076
208 V	2P+G	63-14122-K16•	63-18122-K16•
208 V	3P+G	63-14123-K16•	63-18123-K16•
250 V	2P+G	63-14072	63-18072
250 V	3P+G	63-14073	63-18073
277 V	1P+N+G	63-14045	63-18045
277 480 V	3P+N+G	63-14047	63-18047
347 600 V	3P+N+G	63-14147	63-18147
480 V	2P+G	63-14042	63-18042
480 V	3P+G	63-14043	63-18043
600 V	2P+G	63-14142	63-18142
600 V	3P+G	63-14143	63-18143

For international configurations and ratings (IEC,CE) visit meltric.com/international-catalog or contact Customer Service at 800-433-7642.

Main Options

Mushroom Pawl

Padlock Pawl

Self-Returning Lid
Recommended for cord applications to keep lid tucked in to avoid damage.

RECEPTACLE OPTIONS	SUFFIX #	INLET OPTIONS	SUFFIX #
With Shunt Contact	Recept # -972[1]	Self-Ejecting Plug Release**	Inlet # -338
Straight Insertion	Recept # -352[2]	Without Lockout Hole	Inlet # -A155
Self-Ejecting Connector Release**	Recept # -354[2]		
Mushroom Pawl	Recept # -375		
Padlock Pawl	Recept # -843		
Metal Pawl	Recept # -824		
Self-Returning Lid (Manual Close)	Recept # -NC		

• **Notice:** Product has changed and will not mate with prior 63-1416x and 63-1816x 120 V and 208 V configurations. Please contact customer service if product will be used with devices purchased prior to January 31, 2021.

Notes: [1] Unlike other DSN & DS products, the DSN20 pilots are only on the receptacle side and create a continuity loop that is completed when a plug is connected to the receptacle.

** For self-ejecting connectors and plugs, a 443 suffix must be added to the handle part number. See pages 233-234 for more information.
[2] This option includes the Self-Returning Lid..

! See pages 231-240 for detailed information on these options

Order Example: 480 V DSN20 with padlock pawl
DSN20 Receptacle 3P+G = 63-14043***-843***

Handle Option Guide pgs 237-238

INSTALLATION ACCESSORIES – SIZE 1

When properly installed, all accessories meet or exceed the environmental ratings of the devices they are mounted to; unless otherwise noted.

HANDLES

HANDLE WITH NPT		PART # POLY	PART # METAL
Poly	1/2"	511P0N05	791P0N05L
Poly	3/4"	511P0N07	791P0N07L
Metal	1"	511P0N10	791P0N10L

For available cord grips, see pg 159.

POLY HANDLE WITH CORD GRIP	CABLE RANGE	PART #
	.350-.520"	711P0BP6
	.520-.680"	711P0CP5
	.680-.980"	711P0DP4

METAL HANDLE WITH CORD GRIP		
	.438-.500"	791P0BS3L
	.500-.562"	791P0BS4L
	.562-.625"	791P0CS1L
	.625-.750"	791P0CS4L

POLY HANDLE		
	.350-.700"	511P0D18

POLY EXTENDED HANDLE		
	.200-.820"	511P0D21

POLY ANGLED HANDLE		
	.354-.708"	511P6D18

BOXES

POLY CONDUIT ENTRY WITH NPT		PART #
30°	1/2"	511B3N05
30°	3/4"	511B3N07

* 6.7 in³

* Interior volume with receptacle installed.

POLY WALL BOX WITH ANGLE		
70°		511C7000
	Ground Bar	51-AA089

* 82.0 in³

70° poly boxes are not drilled.

* Interior volume with receptacle installed.

POLY ANGLE WITH METAL BOX WITH NPT		
70°	1/2"	711C7N05
70°	3/4"	711C7N07
70°	1"	711C7N10
70°	1 1/4"	711C7N12
70°	1 1/2"	711C7N15

* 74.6 in³

* Interior volume with receptacle installed.

METAL BOX WITH NPT		
0°	1/2"	7T1F0N05
0°	3/4"	7T1F0N07
0°	1"	7T1F0N10
0°	1 1/4"	7T1F0N12

POLY ANGLE WITH METAL BOX WITH NPT		
30°	1/2"	711C3N05
30°	3/4"	711C3N07
30°	1"	711C3N10
30°	1 1/4"	711C3N12

* 29.8 in³

* Interior volume with receptacle installed.

NPT on top or bottom (if rotated). For other configurations, contact Customer Service.

ANGLES

POLY ANGLE		
30°	511M3	
70°	511M7	Panel mounting only.

METAL ANGLE		
0°	591M0	
FS/FD 30°	791M3FS	Base measures approximately 4.2" x 2.7". Due to the variation in sizes of FS boxes, please verify that your FS box matches our dimensions, if not call Customer Service for other solutions.
45°	591M4	

MISCELLANEOUS ACCESSORIES

FINGER DRAWPLATES		
	61-1A346	Set of Two (2) Recommended for cord to cord assembly applications, for easier connector closure.

PROTECTIVE INLET/PLUG CAP		
	61-1A426	For Inlets/Plugs Only.

PADLOCKABLE INLET/PLUG CAP		
	61-1A826	For Inlets/Plugs Only.

SCREWDRIVER FOR TERMINAL SCREWS		
	SD18	Klein 608-3 1/8" cabinet with 3" round shank.

EASY RETROFIT ADAPTER PLATES		
	see pg 240	Mount to existing boxes.

RECEPTACLE LOCKING PIN		
	LP-843	Requires Padlockable Pawl option (-843) on receptacle.

DSN30 Switch-Rated - 30 A

UL/CSA Ratings

- **Max Amperage & Voltage**
  30 A, 600 VAC
- **Switch-Rating (AC Only)**
  Branch Circuit & Motor Circuit Disconnect Switching
- **Horsepower Ratings**

120 V	1Ø	2 hp
240 V	1Ø	3 hp
208 V	3Ø	5 hp
240 V	3Ø	5 hp
480 V	3Ø	15 hp
600 V	3Ø	15 hp

- **Short Circuit Rating**
  100 kA Close & Withstand
  Testing was performed with RK1 current limiting fuses sized at 400% of the highest full load motor ampacity associated with the devices hp rating.
- **Environmental Ratings**
  Type 4X/IP66/IP67/IP69/IP69K
- **Temperature Range**
  Min -40°F/Max 140°F
  See pg 254 for temperatures outside of this range.
- **Wiring Capacity**
  Based on THHN wire sizes
  Min 14 AWG Max 8 AWG
  Aux Contacts - 14 AWG
- **Certifications**
  UL 2682, UL 1682,
  CSA C22.2 NO. 182.1, NOM

Receptacle (female)

Inlet (male)

! Don't forget to add installation accessories to your order

North American UL/CSA Configurations

VOLTAGE	POLARITY	PART # POLY	PART # POLY
120 V	1P+N+G	63-34165	63-38165
120 208 V	3P+N+G	63-34167	63-38167
125 V	1P+N+G	63-34075	63-38075
125 250 V	2P+N+G	63-34076	63-38076
208 V	2P+G	63-34162	63-38162
208 V	3P+G	63-34163	63-38163
250 V	2P+G	63-34072	63-38072
250 V	3P+G	63-34073	63-38073
277 V	1P+N+G	63-34045	63-38045
277 480 V	3P+N+G	63-34047	63-38047
347 600 V	3P+N+G	63-34147	63-38147
480 V	2P+G	63-34042	63-38042
480 V	3P+G	63-34043	63-38043
600 V	2P+G	63-34142	63-38142
600 V	3P+G	63-34143	63-38143

For international configurations and ratings (IEC,CE) visit meltric.com/international-catalog or contact Customer Service at 800-433-7642.

Main Options

Auxiliary/Pilot Contacts

Mushroom Pawl

Padlock Pawl

Self-Returning Lid
Recommended for cord applications to keep lid tucked in to avoid damage.

RECEPTACLE OPTIONS	SUFFIX #	INLET OPTIONS	SUFFIX #
With 2 Auxiliary/Pilot Contacts	Recept # -972	With 2 Auxiliary/Pilot Contacts	Inlet # -972
Straight Insertion	Recept # -352[2]	Self-Ejecting Plug Release**	Inlet # -338
Self-Ejecting Connector Release**	Recept # -354[2]	Without Lockout Hole	Inlet # -A155
Mushroom Pawl	Recept # -375	For Microswitch	Inlet # -270[3,4]
Padlock Pawl	Recept # -843		
Metal Pawl	Recept # -824		
Self-Returning Lid (Manual Close)	Recept # -NC		
With Microswitch	Recept # -270[3,4]		

Notes:

** For self-ejecting connectors and plugs, a 443 suffix must be added to all handles except the Poly Handle with NPT and Poly Handle with Cord Grip as these handles come with an integrated cable guide. See pages 233-234 for more information.

[2] This option includes the Self-Returning Lid.

[3] Not UL/CSA listed.

[4] Not available on 3P+N+G configurations.

! See pages 231-240 for detailed information on these options

Order Example: 480 V DSN30 + 2 auxiliary contacts
DSN30 Inlet 3P+G = 63-38043-***972***

Handle Option Guide pgs 237-238

INSTALLATION ACCESSORIES – SIZE 2

When properly installed, all accessories meet or exceed the environmental ratings of the devices they are mounted to; unless otherwise noted.

HANDLES

HANDLE WITH NPT		PART # POLY	PART # METAL
NEW Poly	1/2"	512P0N05	592P0N05
	3/4"	512P0N07	592P0N07
	1"	512P0N10	592P0N10
Metal	1 1/4"	512P0N12	-

For available cord grips, see pg 159.

POLY HANDLE WITH CORD GRIP	CABLE RANGE	PART #
NEW	.350-.520"	712P0BP6
	.520-.680"	712P0CP5
	.680-.980"	712P0DP4
	.980-1.260"	712P0EP4

METAL HANDLE WITH CORD GRIP		
	.438-.500"	792P0BS3
	.500-.562"	792P0BS4
	.562-.625"	792P0CS2
	.625-.750"	792P0CS4
	.770-.875"	792P0DS1
	.870-1.000"	792P0DS3

POLY HANDLE		
	.200-.820"	512P0D21

POLY HANDLE WITH CLAMP & BUSHING		
	.750-.875"	712P0S14
	.875-1.000"	712P0S16
	1.000-1.125"	712P0S18
	1.125-1.250"	712P0S20
	1.250-1.375"	712P0S22

ANGLES

POLY ANGLE			
	30°	512M3	
	70°	512M7	Panel mounting only.

METAL ANGLE			
	0°	592M0	
	30°	592M3	
	FS/FD 30°	792M3FS	Base measures approximately 4.2" x 2.7". Due to the variation in sizes of FS boxes, please verify that your FS box matches our dimensions, if not call Customer Service for other solutions.

BOXES

POLY CONDUIT ENTRY WITH NPT			PART #	
* 8.5 in³	30°	1/2"	512B3N05	* Interior volume with receptacle installed.
	30°	3/4"	512B3N07	

POLY WALL BOX WITH ANGLE				
* 82.0 in³	70°		512C7000	70° poly boxes are not drilled. * Interior volume with receptacle installed.
		Ground Bar	51-AA089	

POLY ANGLE WITH METAL WALL BOX WITH NPT				
* 74.6in³	70°	1/2"	712C7N05	* Interior volume with receptacle installed.
	70°	3/4"	712C7N07	
	70°	1"	712C7N10	
	70°	1 1/4"	712C7N12	
	70°	1 1/2"	712C7N15	

METAL BOX WITH NPT			
	0°	1/2"	7T1F0N05
	0°	3/4"	7T1F0N07
	0°	1"	7T1F0N10
	0°	1 1/4"	7T1F0N12

POLY ANGLE WITH METAL BOX WITH NPT				
* 28.7 in³	30°	1/2"	712C3N05	* Interior volume with receptacle installed.
	30°	3/4"	712C3N07	
	30°	1"	712C3N10	
	30°	1 1/4"	712C3N12	

NPT on top or bottom (if rotated). For other configurations, contact Customer Service.

MISCELLANEOUS ACCESSORIES

FINGER DRAWPLATES		
	61-3A346	Set of Two (2) Recommended for all assembly applications, for easier connector closure.

PROTECTIVE INLET/PLUG CAP		
	61-3A426	For Inlets/Plugs Only.

PADLOCKABLE INLET/PLUG CAP		
	61-3A826	For Inlets/Plugs Only.

SPRING-LOADED PADLOCKABLE INLET/PLUG CAP		
	61-3A226	Metal – For Inlets/Plugs Only. In order to achieve max water ingress protection of Type 3R/IP55, spring loaded caps should be ordered with inlets equipped with -A155 suffix.

SCREWDRIVER FOR TERMINAL SCREWS		
	SD18	Klein 608-3 1/8" cabinet with 3" round shank.

RECEPTACLE LOCKING PIN		
	LP-843	Requires Padlockable Pawl option (-843) on receptacle.

DSN60 Switch-Rated - 60 A

UL/CSA RATINGS

- **Max Amperage & Voltage**
  60 A, 600 VAC
- **Switch-Rating (AC Only)**
  Branch Circuit & Motor Circuit Disconnect Switching
- **Horsepower Ratings**

120 V	1Ø	2 hp
240 V	1Ø	3 hp
208 V	3Ø	7.5 hp
240 V	3Ø	7.5 hp
480 V	3Ø	20 hp
600 V	3Ø	20 hp

- **Short Circuit Rating**
  100 kA Close & Withstand
  Testing was performed with RK1 current limiting fuses sized at 400% of the highest full load motor ampacity associated with the devices hp rating.
- **Environmental Ratings**
  Type 4X/IP66/IP67/IP69/IP69K
- **Temperature Range**
  Min -40°F/Max 140°F
  See pg 254 for temperatures outside of this range.
- **Wiring Capacity**
  Based on THHN wire sizes
  Min 14 AWG Max 4 AWG
  Aux Contacts - 14 AWG
- **Certifications**
  UL 2682, UL 1682,
  CSA C22.2 NO. 182.1, NOM

Receptacle
(female)

Inlet
(male)

! Don't forget to add installation accessories to your order

North American UL/CSA Configurations

VOLTAGE	POLARITY	PART # POLY	PART # POLY
120 V	1P+N+G	63-64165	63-68165
120 208 V	3P+N+G	63-64167	63-68167
125 V	1P+N+G	63-64075	63-68075
125 250 V	2P+N+G	63-64076	63-68076
208 V	2P+G	63-64162	63-68162
208 V	3P+G	63-64163	63-68163
250 V	2P+G	63-64072	63-68072
250 V	3P+G	63-64073	63-68073
277 V	1P+N+G	63-64045	63-68045
277 480 V	3P+N+G	63-64047	63-68047
347 600 V	3P+N+G	63-64147	63-68147
480 V	2P+G	63-64042	63-68042
480 V	3P+G	63-64043	63-68043
600 V	2P+G	63-64142	63-68142
600 V	3P+G	63-64143	63-68143

For international configurations and ratings (IEC,CE) visit meltric.com/international-catalog or contact Customer Service at 800-433-7642.

MAIN OPTIONS

Auxiliary/Pilot Contacts

Mushroom Pawl

Padlock Pawl

Self-Returning Lid
Recommended for cord applications to keep lid tucked in to avoid damage.

! See pages 231-240 for detailed information on these options

RECEPTACLE OPTIONS	SUFFIX #	INLOET OPTIONS	SUFFIX #
With 2 Auxiliary/Pilot Contacts	Recept # -972	With 2 Auxiliary/Pilot Contacts	Inlet # -972
With 3 Auxiliary/Pilot Contacts	Recept # -973	With 3 Auxiliary/Pilot Contacts	Inlet # -973
With 4 Auxiliary/Pilot Contacts	Recept # -974	With 4 Auxiliary/Pilot Contacts	Inlet # -974
Straight Insertion	Recept # -352[2]	Self-Ejecting Plug Release**	Inlet # -338
Self-Ejecting Connector Release**	Recept # -354[2]	Without Lockout Hole	Inlet # -A155
Mushroom Pawl	Recept # -375	For Microswitch	Inlet # -270[3,4]
Padlock Pawl	Recept # -843		
Padlockable Mushroom Pawl	Recept # -375		
Metal Pawl	Recept # -824		
Self-Returning Lid (Manual Close)	Recept # -NC		
With Microswitch	Recept # -270[3,4]		

Notes:
** For self-ejecting connectors and plugs, a 443 suffix must be added to the handle part number. See pages 233-234 for more information.
[2] This option includes the Self-Returning Lid.
[3] Not UL/CSA listed.
[4] Not available on 3P+N+G configurations

Order Example: 480 V DSN60 + 2 auxiliary contacts
DSN60 Inlet 3P+G = 63-68043-***972***

Handle Option Guide pgs 237-238

INSTALLATION ACCESSORIES – SIZE 3

When properly installed, all accessories meet or exceed the environmental ratings of the devices they are mounted to; unless otherwise noted.

HANDLES

HANDLE WITH NPT		PART # POLY	PART # METAL
Poly	1/2"	513P0N05	593P0N05
Poly	3/4"	513P0N07	593P0N07
Metal	1"	513P0N10	593P0N10
Metal	1 1/4"	513P0N12	593P0N12

For available cord grips, see pg 159.

POLY HANDLE WITH CORD GRIP	CABLE RANGE	PART #
	.520-.680"	713P0CP5
	.680-.980"	713P0DP4
	.980-1.260"	713P0EP4

METAL HANDLE WITH CORD GRIP		
	.635-.750"	793P0CS4
	.770-.850"	793P0DS1
	.875-1.000"	793P0DS3
	1.000-1.125"	793P0ES2

POLY HANDLE		
	.390-1.180"	513P0D30

POLY HANDLE WITH BUILT IN DRAWPLATES		
	.390-1.180"	513P0D30473

Makes connector closures easier.

POLY HANDLE WITH CLAMP & BUSHING		
	.750-.875"	713P0S14
	.875-1.000"	713P0S16
	1.000-1.125"	713P0S18
	1.125-1.250"	713P0S20
	1.250-1.375"	713P0S22

ANGLES

POLY ANGLE			
	30°	513M3	
	70°	513M7	Panel mounting only.

METAL ANGLE			
	0°	593M0	
	30°	593M3	
	FS/FD 30°	793M3FS	Base measures approximately 4.2" x 2.7". Due to the variation in sizes of FS boxes, please verify that your FS box matches our dimensions, if not call Customer Service for other solutions.
	70°	593M7	

BOXES

POLY CONDUIT ENTRY WITH NPT			PART #	
* 13.5 in³	30°	1/2"	513B3N05	* Interior volume with receptacle installed.
	30°	3/4"	513B3N07	
	30°	1"	513B3N10	

POLY WALL BOX WITH ANGLE				
* 179.41 in³	70°		513C7000	70° poly boxes are not drilled. * Interior volume with receptacle installed.
		Ground Bar	51-AA089	

POLY ANGLE WITH METAL BOX WITH NPT				
* 177.7 in³	70°	1/2"	713C7N05	* Interior volume with receptacle installed.
	70°	3/4"	713C7N07	
	70°	1"	713C7N10	
	70°	1 1/4"	713C7N12	
	70°	1 1/2"	713C7N15	

METAL BOX WITH NPT			
	0°	1/2"	7T1F0N05
	0°	3/4"	7T1F0N07
	0°	1"	7T1F0N10
	0°	1 1/4"	7T1F0N12

POLY ANGLE WITH METAL BOX WITH NPT				
* 29.6 in³	30°	1/2"	713C3N05	* Interior volume with receptacle installed.
	30°	3/4"	713C3N07	
	30°	1"	713C3N10	
	30°	1 1/4"	713C3N12	

NPT on top or bottom (if rotated). For other configurations, contact Customer Service.

MISCELLANEOUS ACCESSORIES

FINGER DRAWPLATES		
	61-6A346	Set of Two (2) Recommended for cord to cord assembly applications, for facilitated mating.

PROTECTIVE INLET/PLUG CAP		
	61-6A426	For Inlets/Plugs Only.

PADLOCKABLE INLET/PLUG CAP		
	61-6A826	For Inlets/Plugs Only.

SPRING-LOADED PADLOCKABLE INLET/PLUG CAP		
	61-6A226	Metal – For Inlets/Plugs Only. In order to achieve max water ingress protection of Type 3R/IP55, spring loaded caps should be ordered with inlets equipped with -A155 suffix.

CORD GRIP WITH OPTIONS		
	see pg 159	

RECEPTACLE LOCKING PIN		
	LP-843	Requires Padlockable Pawl option (-843) on receptacle.

DSN100 Switch-Rated - 100 A

UL/CSA Ratings

- **Max Amperage & Voltage**
  100 A, 600 VAC
- **Switch-Rating (AC Only)**
  Branch Circuit & Motor Circuit Disconnect Switching
- **Horsepower Ratings**

120 V	1Ø	5 hp
240 V	1Ø	10 hp
208 V	3Ø	20 hp
240 V	3Ø	20 hp
480 V	3Ø	50 hp
600 V	3Ø	50 hp

- **Short Circuit Rating**
  100 kA Close & Withstand
  Tested with RK1 current limiting fuses sized at 400% of the highest full load motor ampacity.
- **Environmental Ratings**
  Type 4X/IP66/IP67/IP69/IP69K
- **Temperature Range**
  Min -40°F/Max 140°F
  See pg 254 for temperatures outside of this range.
- **Wiring Capacity**
  Based on THHN wire sizes
  Min 10 AWG Max 2 AWG
  Aux Contacts - Prewired 14 AWG
- **Certifications**
  UL 2682, UL 1682,
  CSA C22.2 NO. 182.1, NOM

Receptacle (female)

Inlet (male)

! Don't forget to add installation accessories to your order

North American UL/CSA Configurations

VOLTAGE	POLARITY	PART # POLY	PART # METAL	PART # POLY	PART # METAL
120 V	1P+N+G	63-84165	69-84165	63-88165	69-88165
120 208 V	3P+N+G	63-84167	69-84167	63-88167	69-88167
125 V	1P+N+G	63-84075	69-84075	63-88075	69-88075
125 250 V	2P+N+G	63-84076	69-84076	63-88076	69-88076
208 V	2P+G	63-84162	69-84162	63-88162	69-88162
208 V	3P+G	63-84163	69-84163	63-88163	69-88163
250 V	2P+G	63-84072	69-84072	63-88072	69-88072
250 V	3P+G	63-84073	69-84073	63-88073	69-88073
277 V	1P+N+G	63-84045	69-84045	63-88045	69-88045
277 480 V	3P+N+G	63-84047	69-84047	63-88047	69-88047
347 600 V	3P+N+G	63-84147	69-84147	63-88147	69-88147
480 V	2P+G	63-84042	69-84042	63-88042	69-88042
480 V	3P+G	63-84043	69-84043	63-88043	69-88043
600 V	2P+G	63-84142	69-84142	63-88142	69-88142
600 V	3P+G	63-84143	69-84143	63-88143	69-88143

For international configurations and ratings (IEC,CE) visit meltric.com/international-catalog or contact Customer Service at 800-433-7642.

Main Options

Auxiliary/Pilot Contacts

Mushroom Pawl

Padlock Pawl

Self-Returning Lid
Recommended for cord applications to keep lid tucked in to avoid damage.

! See pages 231-240 for detailed information on these options

RECEPTACLE OPTIONS	SUFFIX #	INLET OPTIONS	SUFFIX #
With 2 Auxiliary/Pilot Contacts	Recept # -972	With 2 Auxiliary/Pilot Contacts	Inlet # -972
With 3 Auxiliary/Pilot Contacts	Recept # -263	With 3 Auxiliary/Pilot Contacts	Inlet # -263
With 4 Auxiliary/Pilot Contacts	Recept # -264	With 4 Auxiliary/Pilot Contacts	Inlet # -264
Straight Insertion	Recept # -352[2]	Self-Ejecting Plug Release**	Inlet # -338
Self-Ejecting Connector Release**	Recept # -354[2]	Without Lockout Hole	Inlet # A155
Mushroom Pawl	Recept # -375	For Microswitch	Inlet # -270[3,4]
Padlock Pawl	Recept # -843		
Screw-Type Locking Pawl	Recept # -845		
Metal Pawl (on Poly Receptacle)	Recept # -824		
Self-Returning Lid (Manual Close)	Recept # -NC		
With Microswitch	Recept # -270[3,4]		

Notes:
** For self-ejecting connectors and plugs, a 443 suffix must be added to the handle part number. See pages 233-234 for more information.
[2] This option includes the Self-Returning Lid.
[3] Not UL/CSA listed.
[4] Not available on 3P+N+G configurations.

Order Example: 480 V DSN100 + 2 auxiliary contacts
DSN100 Poly inlet 3P+G = 63-88043-***972***

Handle Option Guide pgs 237-238

INSTALLATION ACCESSORIES – SIZE 4

When properly installed, all accessories meet or exceed the environmental ratings of the devices they are mounted to; unless otherwise noted.

HANDLES

HANDLE WITH NPT		PART # POLY	PART # METAL
Poly	1/2"	514P0N05	594P0N05
Poly	3/4"	514P0N07	594P0N07
Poly	1"	514P0N10	594P0N10
Metal	1 1/4"	514P0N12	594P0N12
Metal	1 1/2"	514P0N15	594P0N15

For available cord grips, see pg 159.

POLY HANDLE WITH CORD GRIP	CABLE RANGE	PART #
	.680-.980"	714P0DP4
	.980-1.260"	714P0EP4
	1.260-1.560"	714P0FP1

METAL HANDLE WITH CORD GRIP		
	.770-.850"	794P0DS1
	.875-1.000"	794P0DS3
	1.000-1.125"	794P0ES2
	1.250-1.375"	794P0FS1
	1.438-1.562"	794P0FS2*
	1.562-1.688"	794P0FS3*

*May require stripping of cable jacket.

POLY HANDLE		
	.511-1.377"	514P0D35

POLY HANDLE WITH BUILT IN DRAWPLATES		
	.511-1.377"	514P0D35473

Makes connector closures easier.

SANTOPRENE HANDLE		
	.551-.787"	554P0D20L
	.708-.984"	554P0D25L
	.984-1.377"	554P0D35L
	1.377-1.771"	554P0D45L
	1.771-1.929"	554P0D49L

ANGLES

POLY ANGLE				
30°	514M3	70°	514M7 Panel mounting only.

METAL ANGLE		
0°	594M0	
30°	594M3	
30°	794M3L	
30° Oversized	794M3	Mounts on oversize box only. Order with 7T5F0Nxx. See pg 50.
70°	594M7	

BOXES

POLY CONDUIT ENTRY WITH NPT			
30°	1/2"	514B3N05	For poly devices only
30°	3/4"	514B3N07	
30°	1"	514B3N10	* Interior volume with receptacle installed.
30°	1 1/4"	514B3N12	

* 27.7 in³

POLY WALL BOX WITH ANGLE			
70°		514C7000	70° poly boxes are not drilled.
	Ground Bar	51-AA089	* Interior volume with receptacle installed.

* 181.24 in³

POLY ANGLE WITH METAL BOX WITH NPT		
70°	1/2"	714C7N05
70°	3/4"	714C7N07
70°	1"	714C7N10
70°	1 1/4"	714C7N12
70°	1 1/2"	714C7N15

* Interior volume with receptacle installed.

* 177.7 in³

METAL BOX WITH NPT		
0°	1"	7T4F0N10
0°	1 1/4"	7T4F0N12
0°	1 1/2"	7T4F0N15
0°	2"	7T4F0N20

POLY ANGLE WITH METAL BOX WITH NPT			
30°	1"	714C3N10	For metal angle, replace "71" prefix with "79".
30°	1 1/4"	714C3N12	
30°	1 1/2"	714C3N15	* Interior volume with receptacle installed.
30°	2"	714C3N20	

* 61.0 in³ Poly Angle
* 59.4 in³ Metal Angle

MISCELLANEOUS ACCESSORIES

FINGER DRAWPLATES		
	31-6A346	Set of Two (2) Recommended for cord to cord assembly applications, for easier connector closure.

PROTECTIVE INLET/PLUG CAP		
	31-6A426	For Inlets/Plugs Only.

PADLOCKABLE INLET/PLUG CAP		
	DS6PC	Poly – For Inlets/Plugs Only.
	DS6MC	Aluminum – For Inlets/Plugs Only. -A155 suffix required on inlet part # to retain water ingress protection.

SPRING-LOADED PADLOCKABLE INLET/PLUG CAP			
	31-6A226	For Poly Inlets/Plugs Only.	In order to achieve max water ingress protection of Type 3R/IP55, spring loaded caps should be ordered with inlets equipped with -A155 suffix.
	39-6A226	For Metal Inlets/Plugs Only.	

RECEPTACLE LOCKING PIN		
	LP-843	Requires Padlockable Pawl option (-843) on receptacle.

DSN150 Switch-Rated - 150 A

UL/CSA Ratings

- **Max Amperage & Voltage**
  150 A, 600 VAC
- **Switch-Rating (AC Only)**
  Branch Circuit & Motor Circuit Disconnect Switching
- **Horsepower Ratings**

120 V	1Ø	7.5 hp
240 V	1Ø	20 hp
208 V	3Ø	30 hp
240 V	3Ø	30 hp
480 V	3Ø	75 hp
600 V	3Ø	75 hp

- **Short Circuit Rating**
  100 kA Close & Withstand
  Testing was performed with 225 A RK1 non-time delay Mersen fuses.
  10 kA Close & Withstand
  Testing was performed with 400 A RK1 non-time delay Mersen fuses.
- **Environmental Ratings**
  Type 4X/IP66/IP67/IP69/IP69K
- **Temperature Range**
  Min -40°F/Max 140°F
  See pg 254 for temperatures outside of this range.
- **Wiring Capacity**
  Based on THHN wire sizes
  Min 4 AWG Max 2/0 AWG
  Aux Contacts - Prewired 14 AWG
- **Certifications**
  UL 2682, UL 1682,
  CSA C22.2 NO. 182.1, NOM

Main Options

Auxiliary/Pilot Contacts

Mushroom Pawl

Padlock Pawl

Self-Returning Lid
Recommended for cord applications to keep lid tucked in to avoid damage.

! See pages 231-240 for detailed information on these options

Receptacle (female)

Inlet (male)

! Don't forget to add installation accessories to your order

North American UL/CSA Configurations

VOLTAGE	POLARITY	PART # POLY	PART # METAL	PART # POLY	PART # METAL
120 V	1P+N+G	63-94165	69-94165	63-98165	69-98165
120 208 V	3P+N+G	63-94167	69-94167	63-98167	69-98167
125 V	1P+N+G	63-94075	69-94075	63-98075	69-98075
125 250 V	2P+N+G	63-94076	69-94076	63-98076	69-98076
208 V	2P+G	63-94162	69-94162	63-98162	69-98162
208 V	3P+G	63-94163	69-94163	63-98163	69-98163
250 V	2P+G	63-94072	69-94072	63-98072	69-98072
250 V	3P+G	63-94073	69-94073	63-98073	69-98073
277 V	1P+N+G	63-94045	69-94045	63-98045	69-98045
277 480 V	3P+N+G	63-94047	69-94047	63-98047	69-98047
347 600 V	3P+N+G	63-94147	69-94147	63-98147	69-98147
480 V	2P+G	63-94042	69-94042	63-98042	69-98042
480 V	3P+G	63-94043	69-94043	63-98043	69-98043
600 V	2P+G	63-94142	69-94142	63-98142	69-98142
600 V	3P+G	63-94143	69-94143	63-98143	69-98143

For international configurations and ratings (IEC,CE) visit meltric.com/international-catalog or contact Customer Service at 800-433-7642.

RECEPTACLE OPTIONS	SUFFIX #	INLET OPTIONS	SUFFIX #
With 2 Auxiliary/Pilot Contacts	Recept # -262	With 2 Auxiliary/Pilot Contacts	Inlet # -262
With 4 Auxiliary/Pilot Contacts	Recept # -264	With 4 Auxiliary/Pilot Contacts	Inlet # -264
With 6 Auxiliary/Pilot Contacts	Recept # -976	With 6 Auxiliary/Pilot Contacts	Inlet # -976
Straight Insertion	Recept # -352[2]	Self-Ejecting Plug Release**	Inlet # -338
Self-Ejecting Connector Release**	Recept # -354[2]	Without Lockout Hole	Inlet # -A155
Mushroom Pawl	Recept # -375	For Microswitch	Inlet # -270[3,4]
Padlock Pawl	Recept # -843		
Screw-Type Locking Pawl	Recept # -845		
Metal Pawl (on Poly Receptacle)	Recept # -824		
Self-Returning Lid (Manual Close)	Recept # -NC		
With Microswitch	Recept # -270[3,4]		

Notes:

** For self-ejecting connectors and plugs, a 443 suffix must be added to the handle part number. See pages 233-234 for more information.
[2] This option includes the Self-Returning Lid.
[3] Not UL/CSA listed.
[4] Not available on 3P+N+G configurations.

Order Example: 480 V DSN150 + 2 auxiliary contacts
DSN150 Poly inlet 3P+G = 63-98043-***262***

Handle Option Guide pgs 237-238

INSTALLATION ACCESSORIES – SIZE 5

When properly installed, all accessories meet or exceed the environmental ratings of the devices they are mounted to; unless otherwise noted.

HANDLES

HANDLE WITH NPT	PART # POLY	PART # METAL
3/4"	515P0N07	595P0N07
1"	515P0N10	595P0N10
1 1/4"	515P0N12	595P0N12
1 1/2"	515P0N15	595P0N15
2"	515P0N20	595P0N20

For available cord grips, see pg 159.

POLY HANDLE WITH CORD GRIP	CABLE RANGE	PART #
	.980-1.260"	715P0EP4
	1.260-1.560"	715P0FP1
	1.520-1.860"	715P0GP2

METAL HANDLE WITH CORD GRIP		
	1.250-1.375"	795P0FS1
	1.438-1.562"	795P0FS2*
	1.562-1.688"	795P0FS3*
	1.688-1.812"	795P0GS1

*May require stripping of cable jacket.

OVERSIZED METAL HANDLE WITH NPT	
3/4"	795P0N07
1"	795P0N10
1 1/4"	795P0N12
1 1/2"	795P0N15
2"	795P0N20
2 1/2"	795P0N25

For available cord grips, see pg 159.

SANTOPRENE HANDLE	
.708-.984"	555P0D25
.984-1.377"	555P0D35
1.377-1.771"	555P0D45
1.771-1.929"	555P0D49

ANGLES

POLY ANGLE		
30°	515M3	

METAL ANGLE			
0°	595M0		
30°	595M3		
30° Oversized	795M3	Mounts on oversize box only. Order with 7T6F0N25XL box. See pg 52.	
70°	595M7		

BOXES

POLY ANGLE WITH METAL BOX WITH NPT		PART #
30°	1 1/4"	715C3N12
30°	1 1/2"	715C3N15
30°	2"	715C3N20
30°	2 1/2"	715C3N25

* 108.7 in^3

* Interior volume with receptacle installed.

METAL ANGLE WITH METAL BOX WITH NPT		
30°	1 1/4"	795C3N12
30°	1 1/2"	795C3N15
30°	2"	795C3N20
30°	2 1/2"	795C3N25

* 111.8 in^3

* Interior volume with receptacle installed.

METAL BOX WITH NPT		
0°	1 1/4"	7T5F0N12
0°	1 1/2"	7T5F0N15
0°	2"	7T5F0N20
0°	2 1/2"	7T5F0N25

* Interior volume with receptacle installed.

NPT on top or bottom (if rotated). For other configurations, contact Customer Service.

MISCELLANEOUS ACCESSORIES

PROTECTIVE INLET/PLUG CAP	
31-9A426	For Inlets/Plugs Only. Covers lockout hole for watertight seal on inlet. Consult Customer Service for availability.

PADLOCKABLE INLET/PLUG CAP	
DS9MC	Aluminum – For Inlets/Plugs Only. -A155 suffix required on inlet part # to retain water ingress protection.

CORD GRIP WITH OR WITHOUT MESH	
see pg 159	

EASY RETROFIT ADAPTER PLATES	
see pg 240	Mount to existing boxes.

RECEPTACLE LOCKING PIN	
LP-843	Requires Padlockable Pawl option (-843) on receptacle.

DSN Spare Parts

Male Configuration

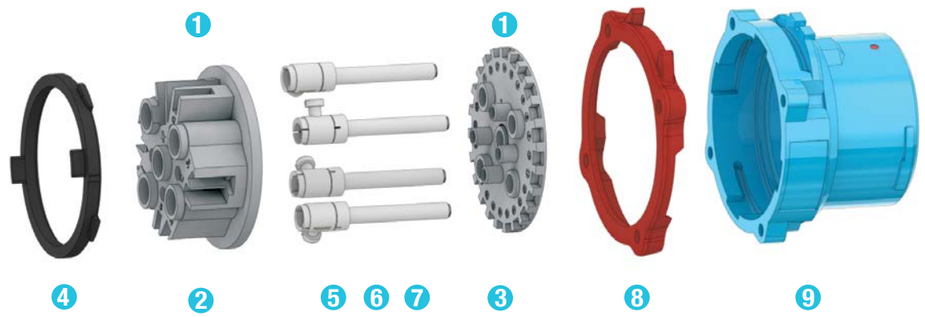

		DSN20 POLY	DSN30 POLY	DSN60 POLY	DSN100 POLY	DSN100 METAL	DSN150 POLY	DSN150 METAL
1	Plug Insulator	63-1A010*	63-3A010*	63-6A010*	63-8A010*	69-8A010*	63-9A010*	69-9A010*
2	Insulator Bottom	63-1A010-B	63-3A010-B	63-6A010-B	63-8A010-B	69-8A010-B	63-9A010-B	69-9A010-B
3	Insulator Top	63-1A010-T*	63-3A010-T*	63-6A010-T*	63-8A010-T*	69-8A010-T*	63-9A010-T*	69-9A010-T*
4	Locking Ring	63-1A583	63-3A583	63-6A583	63-8A583	69-8A583	63-9A583	69-9A583
5	Plug Phase Contact	63-1A011	63-3A011	63-6A011	63-8A011	69-8A011	63-9A011	69-9A011
6	Plug Pilot Contact	-	63-3A011-972	63-6A011-972	63-8A011-972	69-8A011-972	63-9A011-972	69-9A011-972
7	Plug Ground Contact	63-1A019	63-3A019	63-6A019	63-8A019	69-8A019	63-9A019	69-9A019
8	Color-Coded Voltage Gasket	63-1AJ26	63-3AJ26	63-6AJ26	63-8AJ26	69-8AJ26	63-9AJ26	69-9AJ26
		63-1AC26	63-3AC26	63-6AC26	63-8AC26	69-8AC26	63-9AC26	69-9AC26
		63-1AB26	63-3AB26	63-6AB26	63-8AB26	69-8AB26	63-9AB26	69-9AB26
		63-1AR26	63-3AR26	63-6AR26	63-8AR26	69-8AR26	63-9AR26	69-9AR26
		63-1AN26	63-3AN26	63-6AN26	63-8AN26	69-8AN26	63-9AN26	69-9AN26
9	Plug Casing	63-1A014*	63-3A014*	63-6A014*	63-8A014*	69-8A014*	63-9A014*	69-9A014*

* Please provide full part number for accurate part alignment.

Part numbers in catalog are for current revisions, others may be available upon request.

For replacement parts contact Customer Service at 800-433-7642.

Female Configuration

		DSN20 POLY	DSN30 POLY	DSN60 POLY	DSN100 POLY	DSN100 METAL	DSN150 POLY	DSN150 METAL
1	Receptacle Insulator	63-1A020*	63-3A020*	63-6A020*	63-8A020*	69-8A020*	63-9A020*	69-9A020*
2	Insulator Bottom	63-1A020-B	63-3A020-B	63-6A020-B	63-8A020-B	69-8A020-B	63-9A020-B	69-9A020-B
3	Insulator Top	63-1A020-T*	63-3A020-T*	63-6A020-T*	63-8A020-T*	69-8A020-T*	63-9A020-T*	69-9A020-T*
4	Locking Ring	63-1A583	63-3A583	63-6A583	63-8A583	69-8A583	63-9A583	69-9A583
5	Receptacle Phase Contact	63-1A021	63-3A021	63-6A021	63-8A021	69-8A021	63-9A021	69-9A021
6	Receptacle Pilot Contact	-	63-3A021-972	63-6A021-972	63-8A021-972	69-8A021-972	63-9A021-972	69-9A021-972
7	Receptacle Ground Contact	63-1A029	63-3A029	63-6A029	63-8A029	69-8A029	63-9A029	69-9A029
8	Color-Coded Voltage Gasket	63-1AJ26	63-3AJ26	63-6AJ26	63-8AJ26	69-8AJ26	63-9AJ26	69-9AJ26
		63-1AC26	63-3AC26	63-6AC26	63-8AC26	69-8AC26	63-9AC26	69-9AC26
		63-1AB26	63-3AB26	63-6AB26	63-8AB26	69-8AB26	63-9AB26	69-9AB26
		63-1AR26	63-3AR26	63-6AR26	63-8AR26	69-8AR26	63-9AR26	69-9AR26
		63-1AN26	63-3AN26	63-6AN26	63-8AN26	69-8AN26	63-9AN26	69-9AN26
9	Receptacle Casing	63-1A024*	63-3A024*	63-6A024*	63-8A024*	69-8A024*	63-9A024*	69-9A024*
	Lid Replacement Kit	63-1A125	63-3A125	63-6A125	63-8A125	69-8A925	63-9A125	69-9A925
	Pawl Replacement Kit Polyester	63-1A824	63-3A824	63-6A824	63-8A824	-	63-9A824	-
	Pawl Replacement Kit Metal	63-1A924	63-3A924	63-6A924	63-8A924	69-8A824	63-9A924	69-9A824
	Drawbar Replacement Kit	-	-	-	-	-	63-9A726	69-9A726

* Please provide full part number for accurate part alignment.

Part numbers in catalog are for current revisions, others may be available upon request.

For replacement parts contact Customer Service at 800-433-7642.

DSN DIMENSIONS – Provided in Inches

SCAN ME >>

Dimensions are for reference only and may change depending on accessories used. For precise dimensions contact MELTRIC Engineering.

Plug

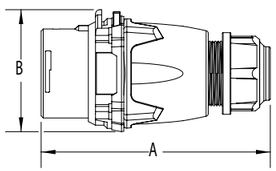

Inlet

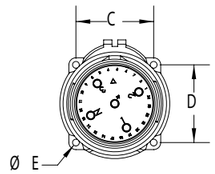

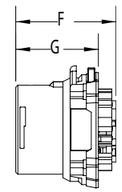

PRODUCT	A	B	C	D	øE	F	G
DSN20/DSN12c	5.28	2.40	1.65	1.65	0.17	2.46	1.87
DSN30/DSN24c	5.75	2.91	1.89	1.89	0.18	2.56	1.97
DSN60/DSN37c	6.30	3.46	2.17	2.17	0.19	2.8	2.21
DSN100	6.70	3.77	2.59	2.59	0.24	3.42	2.38
DSN150	8.33	4.59	3.20	3.20	0.24	4.14	3.04

Connector

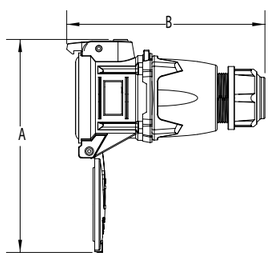

Receptacle

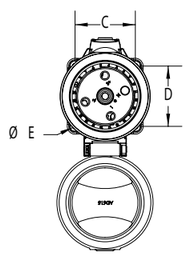

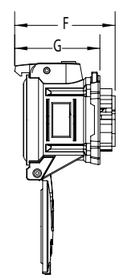

Extended Drawbars

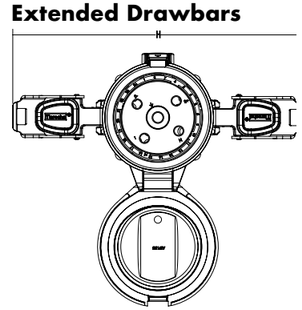

PRODUCT	A	B	C	D	øE	F	G	H
DSN20/DSN12c	5.26	5.60	1.65	1.65	0.19	3.15	2.10	N/A
DSN30/DSN24c	7.05	6.93	1.89	1.89	0.18	3.53	2.88	N/A
DSN60/DSN37c	7.74	7.22	2.17	2.17	0.2	3.64	3.09	N/A
DSN100	8.96	7.90	2.59	2.59	0.22	4.53	3.37	N/A
DSN150	11.04	10.02	3.20	3.20	0.23	5.71	4.74	12.62

Box /30° Angle/ Receptacle/Plug

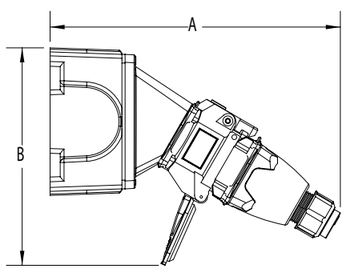

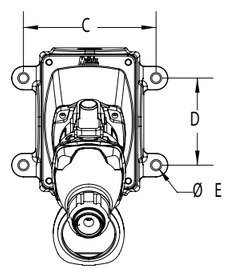

PRODUCT	A	B	C	D	øE
DSN20/DSN12c	7.80	7.25	4.19	2.75	0.27
DSN30/DSN24c	9.85	7.60	4.19	2.75	0.27
DSN60/DSN37c	10.48	8.20	4.19	2.75	0.27
DSN100	11.87	10.74	5.00	3.81	0.33
DSN150	16.06	10.33	6.75	4.25	0.31

30° Angle/Receptacle/Plug

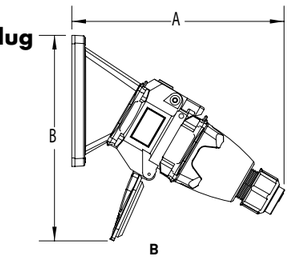

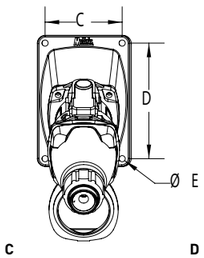

PRODUCT	A	B	C	D	øE
DSN20/DSN12c	7.80	7.10	2.50	3.75	0.18
DSN30/DSN24c	9.85	8.50	2.50	3.75	0.22
DSN60/DSN37c	10.48	9.02	2.50	3.75	0.22
DSN100	9.17	10.45	3.43	4.83	0.26
DSN150	16.06	12.05	4.83	4.83	0.28

70° Wall Box/Receptacle

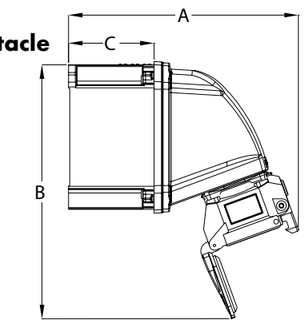

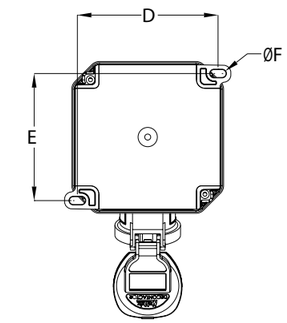

PRODUCT	A	B	C	D	E	øF
DSN20/DSN12c	7.51	8.30	2.80	4.60	4.15	0.26
DSN30/DSN24c	7.93	9.51	2.80	4.60	4.15	0.26
DSN60*/DSN37c	8.91	11.55	2.80	6.17	5.73	0.26
DSN100	9.07	12.70	2.80	6.17	5.73	0.26

* Box has 4 mounting feet.

Plug/Connector

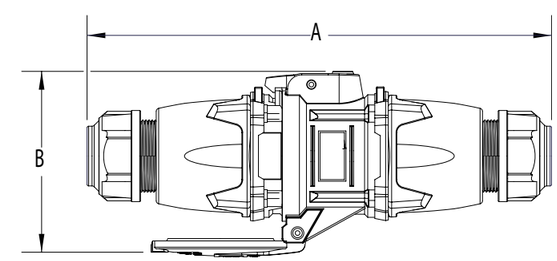

PRODUCT	A	B
DSN20/DSN12c	9.09	3.50
DSN30/DSN24c	10.43	4.57
DSN60/DSN37c	11.26	4.80
DSN100	12.17	8.03
DSN150	19.53	8.03